INSTALLATION MANUAL EN

77-3253

Back Pressure Regulator (Low Shear 1½")

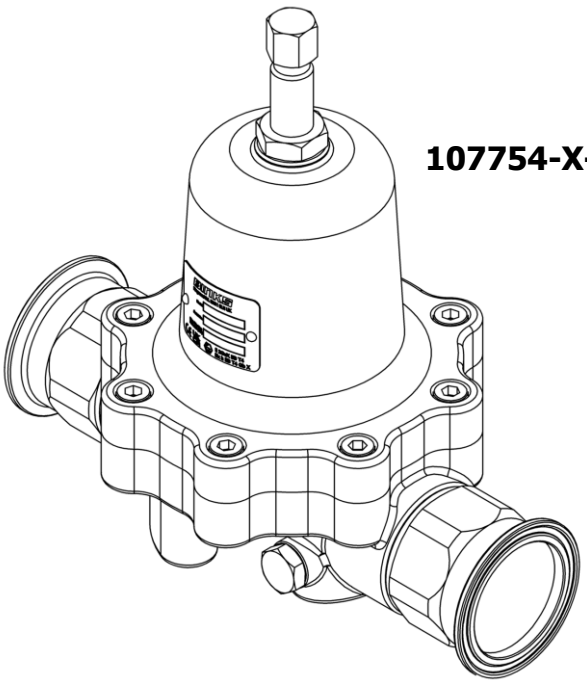

107754-X-X (Manual Control)

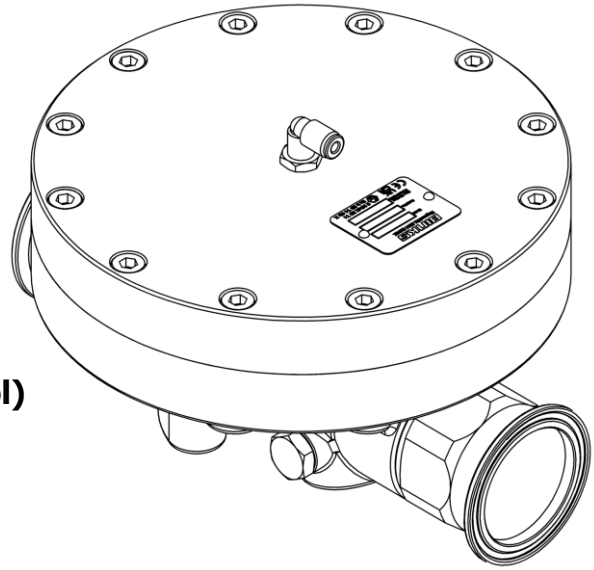

107755-X-X (Pilot Control)

107754-X-X - Manual
107755-X-X - Pilot

ADDITIONAL RESOURCES

For additional information or copies of your service manual, please visit us online at:
binks.com/en/library

Obey local or municipal regulations for product recycling and disposal.

IMPORTANT! DO NOT DESTROY
It is the Customer's responsibility to have all operators and service personnel read and understand this manual. Contact your local Binks representative for additional copies of this manual.
READ ALL INSTRUCTIONS BEFORE OPERATING THIS PRODUCT

Product Description / Object of Declaration:	**BPR - 107757-X-X, 107758-X-X, 107748, 107749, 107750, 107754-X-X, 107755-X-X, PRV22-X-X, 107906, 107908, 107760-X-X, 107928, PRV16-X-X.**
This Product is designed for use with:	**Solvent & Waterbased Materials**
Suitable for use in hazardous area:	**Zone 1/Zone 2**
Protection Level:	**II 2 G c X IIB T4, Ex h IIB T4 Gb X**
Notified body details and role:	**Element Materials Technology Rotterdam B.V. (2812)**
	Lodging of ATEX Technical file
This Declaration of Conformity / Incorporation is issued under the sole responsibility of the manufacturer:	**Binks U.K. Limited, Ringwood Road, Bournemouth, BH11 9LH. UK**
Representative authorised to compile the technical file	**President @. Binks France SAS 5 Place Pierre Semard, 94130 Nogent sur Marne , Paris, France**

EU Declaration of Conformity

This Declaration of Conformity / Incorporation is issued under the sole responsibility of the manufacturer:

Machinery Directive 2006/42/EC
ATEX Directive 2014/34/EU
by complying with the following statutory documents and harmonised standards:
EN ISO 12100:2010 Safety of Machinery - General Principles for Design
EN 12621:2006+2010 Machinery for the supply and circulation of coating materials under pressure - Safety requirements
EN ISO 80079-36:2016 Explosive Atmospheres- Part 36:Non Electrical equipment for explosive atmospheres-Basic methods and requirements.
EN ISO 80079-37:2016 Explosive Atmospheres- Part 37: Non Electrical equipment for explosive atmospheres - protection by methods "c", "b" and "k".
EN 1127-1:2019 Explosive atmospheres - Explosion prevention - Basic concepts

Providing all conditions of safe use / installation stated within the product manuals have been complied with and also installed in accordance with any applicable local codes of practice.

Signed for and on behalf of Binks U.K. Ltd:		F. A. Sutter	Executive President: Engineering and Operations, Shoreview, MN, 55126. USA
Document Part No. . EN		14-04-25	

Product Description / Object of Declaration:	**BPR - 107757-X-X, 107758-X-X, 107748, 107749, 107750, 107754-X-X, 107755-X-X, PRV22-X-X, 107906, 107908, 107760-X-X, 107928, PRV16-X-X.**
This Product is designed for use with:	**Solvent & Waterbased Materials**
Suitable for use in hazardous area:	**Zone 1/Zone 2**
Protection Level:	**II 2 G c X IIB T4, Ex h IIB T4 Gb X**
Approved body details and role:	**Element Materials Technology Warwick Ltd. UK. (0891)**
	Lodging of UKEX Technical file
This Declaration of Conformity / Incorporation is issued under the sole responsibility of the manufacturer:	**Binks U.K. Limited, Ringwood Road, Bournemouth, BH11 9LH. UK**

UKCA Declaration of Conformity

This Declaration of Conformity / Incorporation is issued under the sole responsibility of the manufacturer:

Supply of Machinery (Safety) Regulations 2008
Equipment and Protective Systems Intended for use in Potentially Explosive Atmospheres Regulations 2016
by complying with the following statutory documents and designated standards:
BS EN ISO 12100:2010 Safety of Machinery - General Principles for Design
BS EN ISO 80079-36:2016 Explosive Atmospheres- Part 36:Non Electrical equipment for explosive atmospheres-Basic methods and requirements.
BS EN ISO 80079-37:2016 Explosive Atmospheres- Part 37: Non Electrical equipment for explosive atmospheres - protection by methods "c", "b" and "k".
BS EN 1127-1:2019 Explosive atmospheres - Explosion prevention - Basic concepts

Providing all conditions of safe use / installation stated within the product manuals have been complied with and also installed in accordance with any applicable local codes of practice.

Signed for and on behalf of Binks U.K. Ltd:		F. A. Sutter	Executive President: Engineering and Operations, Shoreview, MN, 55126. USA
Document Part No. 0 EN		22-04-25	

In this part sheet, the words WARNING, CAUTION and NOTE are used to emphasize important safety information as follows:

WARNING	CAUTION	NOTE
Hazards or unsafe practices which could result in severe personal injury, death or substantial property damage.	Hazards or unsafe practices which could result in minor personal injury, product or property damage	Important installation, operation or maintenance information.

WARNING

Read the following warnings before using this equipment.

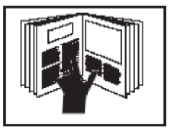

READ THE MANUAL. Before operating finishing equipment, read and understand all safety, operation and maintenance information provided in the operation manual.

WEAR SAFETY GLASSES. Failure to wear safety glasses with side shields could result in serious eye injury or blindness.

DE-ENERGIZE, DE-PRESSURISE, DISCONNECT AND LOCK OUT ALL POWER SOURCES DURING MAINTENANCE. Failure to de-energize, disconnect and lock out all power supplies before performing equipment maintenance could cause serious injury or death.

NOISE LEVELS. The A-weighted sound level of pumping and spray equipment may exceed 85 dB(A) depending on equipment settings. Actual noise levels are available on request. It is recommended that ear protection is worn at all times while equipment is in use.

INSPECT THE EQUIPMENT DAILY. Inspect the equipment for worn or broken parts on a daily basis. Do not operate the equipment if you are uncertain about its condition.

EQUIPMENT MISUSE HAZARD. Equipment misuse can cause the equipment to rupture, malfunction or start unexpectedly and result in serious injury.

HIGH PRESSURE CONSIDERATION. High pressure can cause serious injury. Relieve all pressure before servicing. Spray from the gun, hose leaks or ruptured components can inject fluid into your body and cause extremely serious injury.

STATIC CHARGE. Fluid may develop a static charge that must be dissipated through proper grounding of the equipment, objects to be sprayed and alll other electrically conductive objects in the dispensing area. Improper grounding or sparks can cause a hazardous condition and result in fire, explosion or electric shock and other serious injury.

PROP 65 WARNING. WARNING: This product contains chemicals known to the state of California to cause cancer and birth defects or other reproductive harm.

AUTOMATIC EQUIPMENT. Automatic equipment may start suddenly without warning.

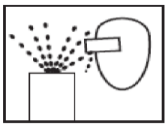

PROJECTILE HAZARD. You may be injured by venting liquids or gases that are released under pressure, or flying debris.

KNOW WHERE AND HOW TO SHUT OFF THE EQUIPMENT IN CASE OF AN EMERGENCY.

PRESSURE RELIEF PROCEDURE. Always follow the pressure relief procedure in the equipment instruction manual.

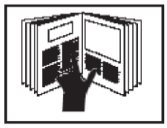

OPERATOR TRAINING. All personnel must be trained before operating finishing equipment.

PACEMAKER WARNING. You are in the presence of magnetic fields which may interfere with the operation of certain pacemakers.

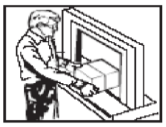

KEEP EQUIPMENT GUARDS IN PLACE. Do not operate the equipment if the safety devices have been removed.

NEVER MODIFY THE EQUIPMENT. Do not modify the equipment unless the manufacturer provides written approval.

PINCH POINT HAZARD. Moving parts can crush and cut. Pinch points are any areas where ther are moving parts.

IT IS THE RESPONSIBILITY OF THE EMPLOYER TO PROVIDE THIS INFORMATION TO THE OPERATOR OF THE EQUIPMENT.

Specification

The Binks Low Shear range of back pressure regulators use either operator set spring pressure (107754-X-X) or air pressure (107755-X-X) to control system fluid pressure upstream of the device by automatically adjusting the level of restriction applied to the flow of fluid passing between its inlet and outlet ports. For system pressure regulation at flow rates below the minimum shown, consider the smaller (¾") product range based on 107757 (manual spring control) and 107758 (air control).

107754-X-X Manual Control	
Ideal Working Range	3-15 bar
	10-100 l/min
Max. Static Pressure	25 bar
Wetted Material	303 grade stainless steel, PTFE, TFM
Weight kg (lb) #	6.5 (14.3)

107755-X-X Pilot Control	
Ideal Working Range	1-15 bar
	10-100 l/min
Max. Static Pressure	25 bar
Wetted Material	303 grade stainless steel, PTFE, TFM
Weight kg (lb) #	7.5 (16.5)

Typical value - some variation will occur depending on selection of inlet and outlet fittings.

Note:
For safety reasons, under no circumstances should regulator fluid pressure exceed the specified Maximum Static Pressure.

Dimensions

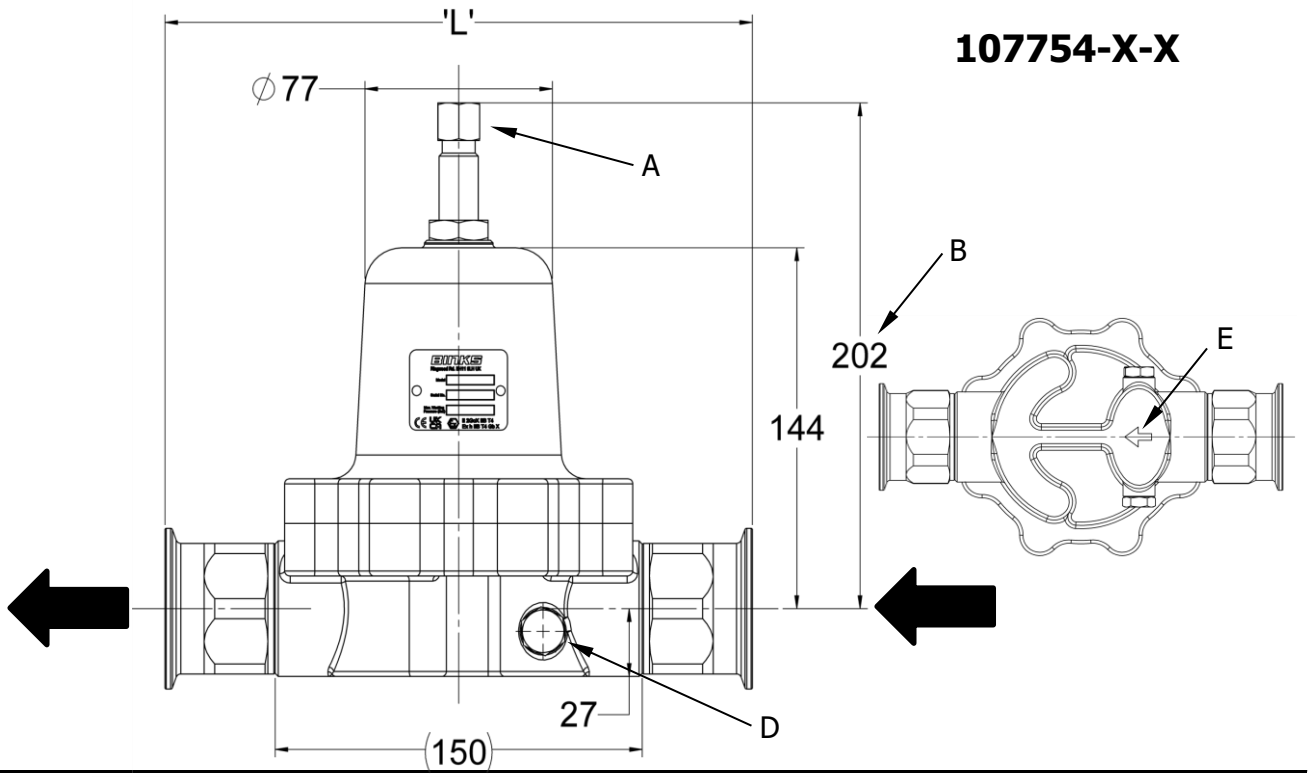

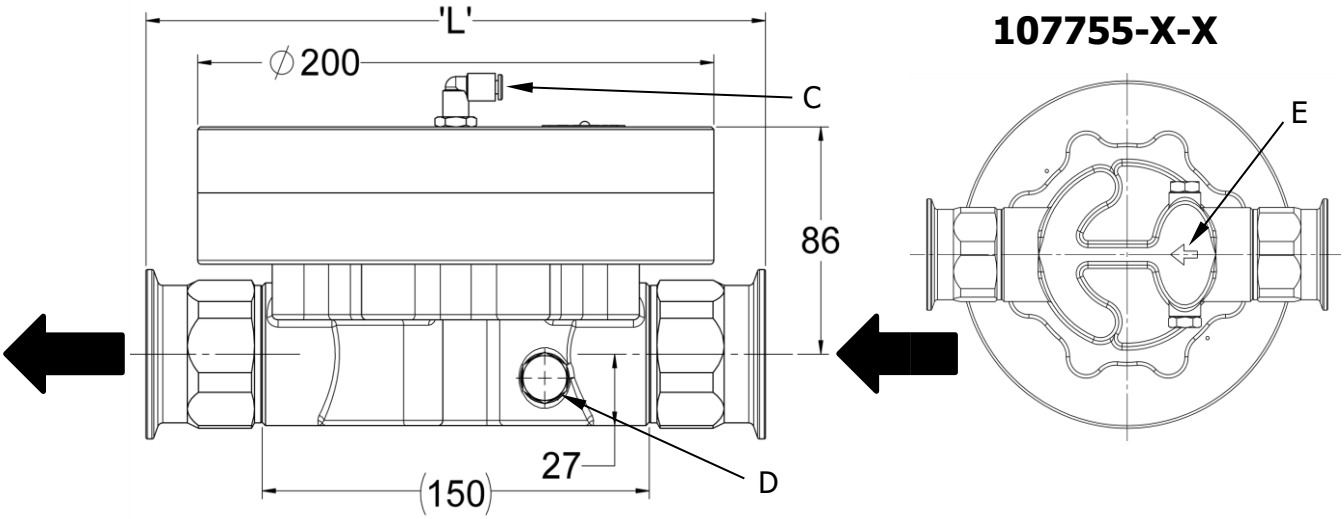

A. Adjuster head: 17mm across flats, locking nut: 24mm across flats.

B. Typical value with spring unloaded.

C. Pilot Air Connection - 4mm outside diameter hose.

D. 2x G¼ (¼" BSPP) Gauge ports both sides of inlet.

E. Underside arrow shows required direction of flow.

Suffix	'L' (mm)
-A-A	240
-B-B	240
-C-C	240
-D-D	240
-E-E	240
-F-F	240
-G-G	240
-H-H	240
-L-L	240
-M-M	272

Model Selection

	Basic Part Number		Inlet Fitting (A-M)		Outlet Fitting (A-M)
(Manual Control)	**107754**	-	**X**	-	**X**
(Pilot Control)	**107755**	-	**X**	-	**X**

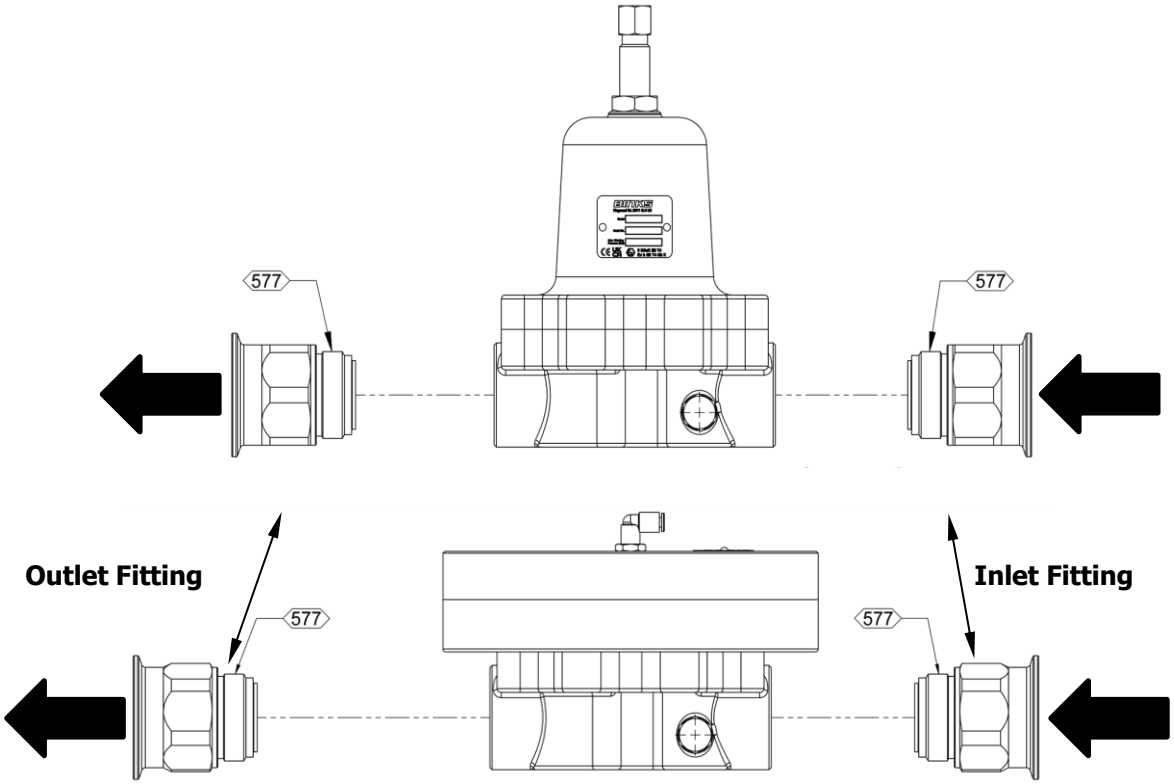

Inlet / Outlet Fitting Selection Table			
Suffix	**Part No.**	**Fitting Description**	**Remarks**
A	192553	DN50 PN16 Slip flange assembly	(BS5404) 107754 only
B	192554	2" Sanitary	Standard
C	192555	1½" Sanitary	Standard
D	192556	1½" NPT Female	
E	192557	Rc1½ (1½" BSPT) Female	
F	192558	42mm Compression Coupling (DIN 2353)	Without olive or nut
G	192559	G1¼ (1¼" BSPP) Male	With 60° internal cone
H	192560	G1½ (1½" BSPP) Male	
L	192564	1" Sanitary	Standard
M	192565	2" Sanitary	'L' = 272mm

NOTES

Installation

Note:

- Before attempting any maintenance ensure that all relevant directions for working safety are followed.

- Take the necessary safety precautions to guard against inhalation or contact with potentially hazardous, toxic or corrosive fluids when modifying any existing fluid filled system.

- The back pressure regulator is tested with demineralised water or light oil before shipping, therefore the fluid chamber should be flushed with suitable material prior to use.

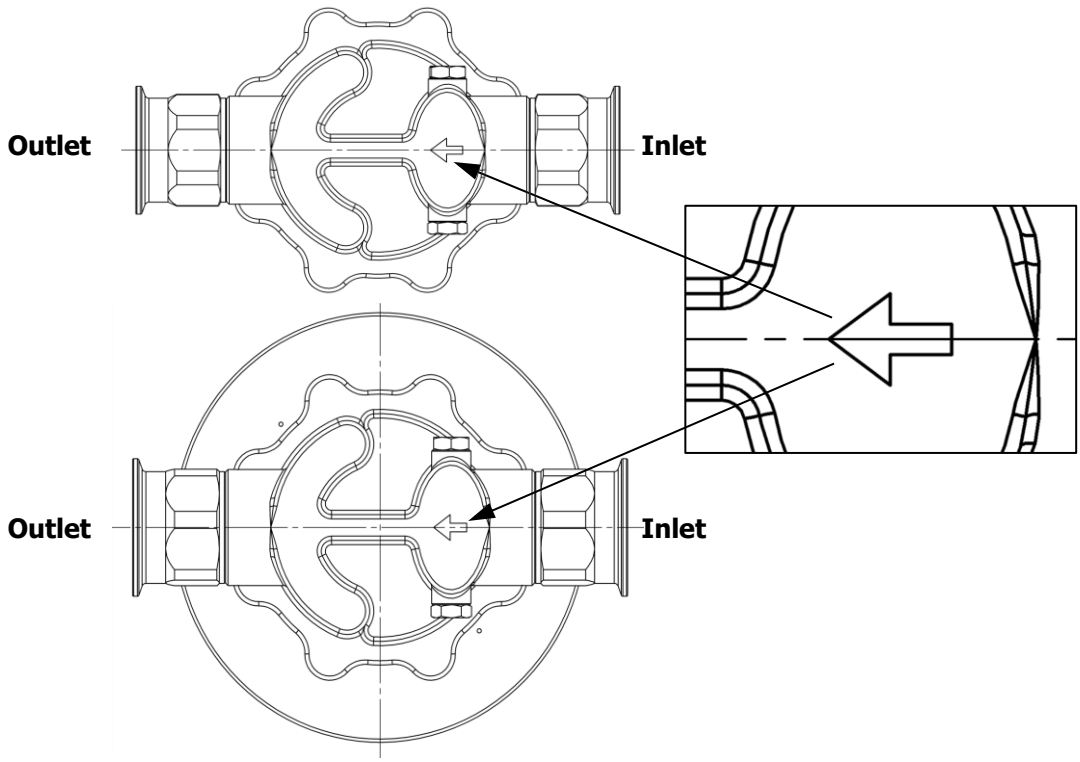

1. Connect the unit into the paint system pipework in the direction indicated by the arrow on the valve body. Always connect the unit using the correct fittings /gaskets and if a threaded fitting is used a suitable thread compatible sealant.

2. A pressure gauge should be mounted directly into the pipework on the inlet side of the unit to allow precise adjustment for the regulated back pressure. Alternatively, a pressure gauge or pressure sensor can be fitted into one of the two gauge ports provided on the inlet side of the regulator base.

Installation

3. If electrically non-conductive piping is used, the regulator must be grounded to avoid a build up of static charge which can occur if regulating non-conductive fluids. In these cases, some form of electrical bonding strap must be fitted to the device to allow any electrostatic charge generated to be safely dissipated.

4. If circulating system pressure testing is carried out with the back pressure regulator in circuit, the fluid test pressure must not exceed 25 bar and the back pressure valve must 'be unloaded' have no spring pressure (or air pressure) acting on the diaphragm.

5. When the paint pipework is to be flushed with the back pressure regulator installed, the back pressure regulator must not have any spring pressure (or air pressure) acting on the diaphragm.
   This status must remain until the paint system has been accepted as clean and contaminant free.

6. Following pressure testing and flushing procedures the diaphragms should be examined and replaced if necessary to ensure the integrity of the unit prior to use in production.

7. 107754-X-X: Turning the main adjusting screw clockwise will increase the spring pressure on the unit and therefore the fluid back pressure on the paint system. Turning the screw anti-clockwise will decrease back pressure.

   107755-X-X: The Pilot controlled unit operates in the same way, an increase in pilot air pressure increases the system back pressure.

8. Adjust the spring (or pilot air pressure) until the desired system fluid back pressure is achieved on the pressure gauge in the BPR inlet pipework.

Setting Back Pressure

Air pilot operated units only (107755-X-X)

Air pilot pressure should be adjusted until the pressure gauge or pressure sensor at or near the regulator inlet shows the required pressure. If no such device is fitted, then the table below can be used as an approximate guide. Note: Data based on tests with deionised water - fluid pressures may vary from those shown when using different fluids and flow rates.

Air pilot pressure - Bar (PSI)	Fluid back pressure, approximate - Bar (PSI)
6 (87)	19.5 (284)
5.5 (80)	18.0 (261)
5 (73)	16.4 (238)
4.5 (65)	14.8 (215)
4 (58)	13.3 (192)
3.5 (51)	11.7 (170)
3 (44)	10.1 (147)
2.5 (36)	8.6 (124)
2 (29)	7.0 (101)
1.5 (22)	5.4 (78)

Assembly Procedure

The back pressure regulator can be serviced and maintained without removing the unit from the paint pipework.

1. Fully unscrew the adjusting screw to remove all paint line pressure (or exhaust the compressed air pilot supply).

2. Isolate the unit from the paint system pipework (and compressed air supply if applicable).

3. Position a 'drip tray' underneath the unit to minimise any paint spillage.

4. 107754-X-X: Unscrew the 8 off bonnet screws by 2 turns and pull the bonnet away from the unit; this should then release any residual paint within the unit. Fully remove the 8 off bonnet screws. Remove the bonnet complete with spring and diaphragm plate and then diaphragm.

   107755-X-X: Remove the 12 off screws retaining the air pilot cap then remove pilot cap with pilot diaphragm. Unscrew the 8 off diaphragm flange attachment screws by 2 turns and pull away from the base; this should then release any residual paint within the unit. Completely unscrew these 8 off screws to allow the diaphragm flange to be lifted off the base. Extract the smaller composite diaphragm.

5. Clean all parts as required.

6. Reassemble by reversing the dismantling procedure shown above, fitting new diaphragms and observing the correct torque and loctite requirements shown in the relevant diagrams on the following pages.

   ** Ensure diaphragms are installed white or light blue side down facing base! **

   Tighten opposed screws in stages to maintain an even clamping force.

7. 107755-X-X: Pressure test with 6 bar compressed air and check for leaks.

8. Reintroduce the paint system pressure and adjust the back pressure regulator to the required setting.

107754 Base Assembly - Parts List

ITEM	PART NUMBER	DESCRIPTION	QTY
1	160406	SPRING	1
2	161981	SEAL - Ø36.2	2
3	163060	LOCKNUT - M16	1
4	164472	SCREW - M8 x 25	8
5	191964	BUTTON	1
6	192505	SEAL - Ø12.4	2
7	192546	BONNET	1
8	192548	BASE	1
9	192549	ADUSTING SCREW	1
10	192551	PLUG - G¼ (¼" BSPP)	2
11	192585	DIAPHRAGM PLATE	1
12	193232	COMPOSITE DIAPHRAGM	1

NOTES

A. Ensure diaphragm is installed white or light blue side down facing base!

B. Cross-tighten screws to 10Nm first to maintain even clamping forces before tightening to final torque indicated on drawing.

107754 Base Assembly

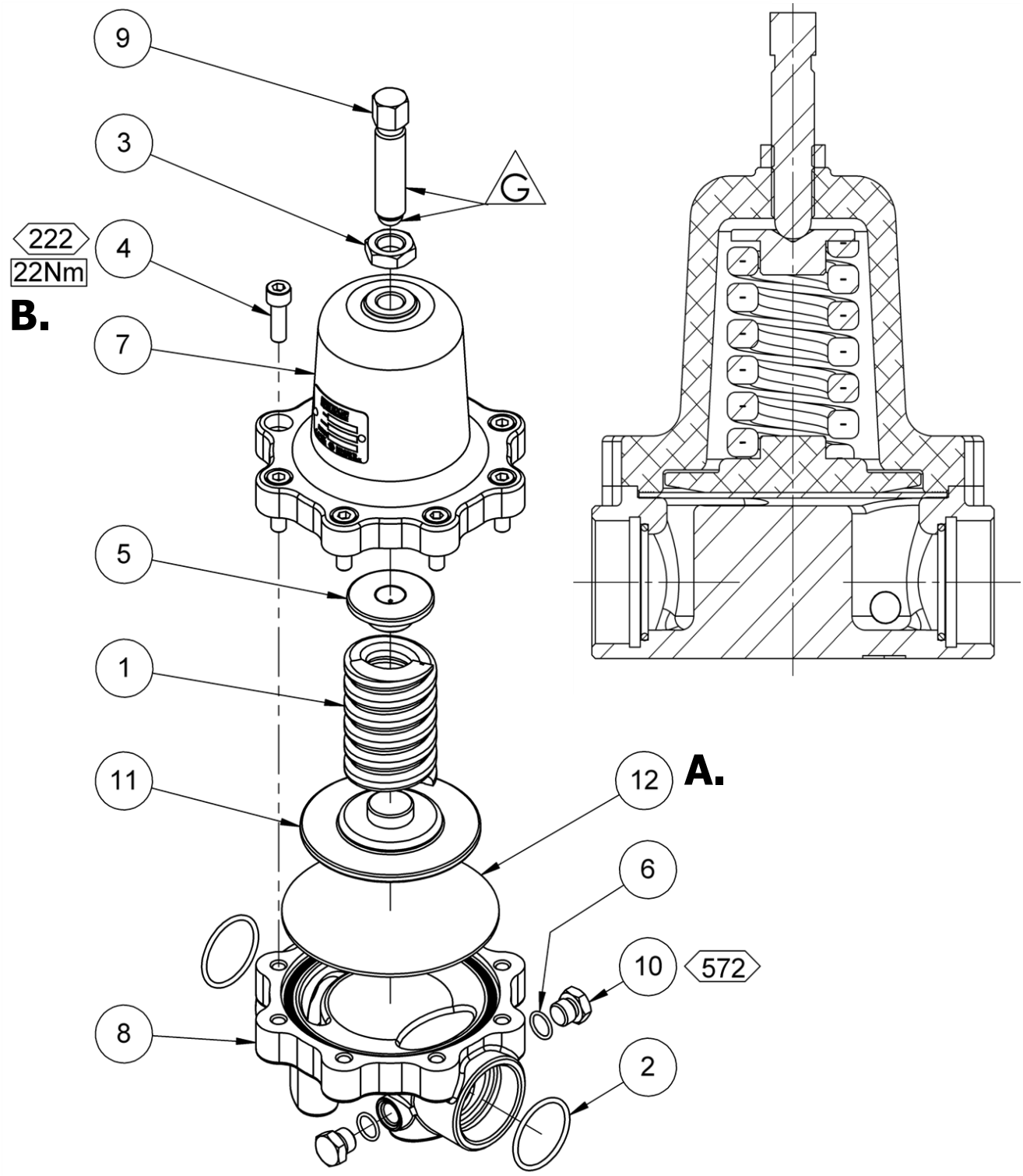

KEY

G GREASE (AGMD-010)

LOCTITE

##Nm TORQUE

107755 Base Assembly - Parts List

ITEM	PART NUMBER	DESCRIPTION	QTY
1	161981	SEAL - Ø36	2
2	163962	SCREW - M8 x 30	12
3	165961	SCREW - M8 x 20	8
4	174647	PUSH IN ELBOW - ⅛" BSPT x 4mm	1
5	192505	SEAL - Ø12.4	2
6	192537	CAP - PILOT BPR	1
7	192540	DIAPHRAGM - PILOT	1
8	192548	BASE	1
9	192551	PLUG - G¼ (¼" BSPP)	2
10	192586	DIAPHRAGM PLATE	1
11	192587	DIAPHRAGM FLANGE	1
12	193232	COMPOSITE DIAPHRAGM	1

NOTES

A. Ensure diaphragms are installed white or light blue side down facing base!

B. Cross-tighten screws to 10Nm first to maintain even clamping forces before tightening to final torque indicated on drawing.

107755 Base Assembly

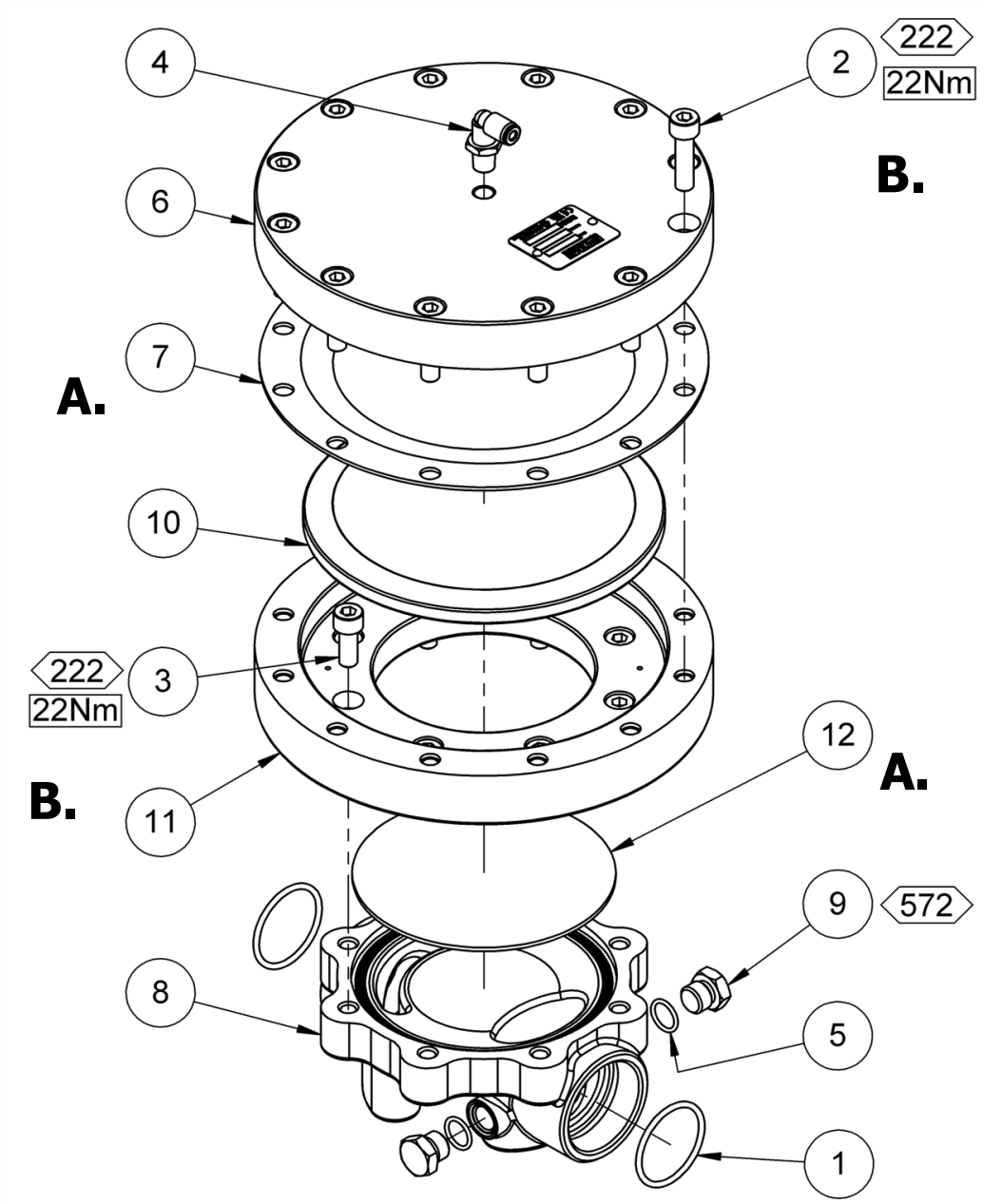

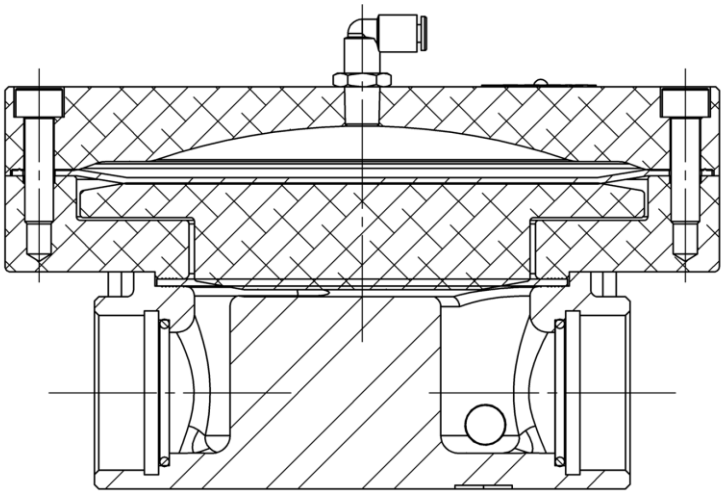

KEY

LOCTITE

##Nm TORQUE

FAULT FINDING

Symptom	Possible Cause	Remedy
Unable to increase to target system back pressure even when operating within specified Ideal Working Range.	Fluid facing side of composite (fluid) diaphragm scoured / damaged.	Replace composite (fluid) diaphragm.
	107754-X-X: Spring fractured.	Replace spring.
	107755-X-X: Insufficient or unsteady air pressure.	Provide stable regulated air supply.
	107755-X-X: Air leakage from witness holes: pilot (air) diaphragm ruptured.	Replace pilot (air) diaphragm.
System back pressure excessive despite reducing spring load or air pressure	Fluid channels in base and / or under composite (fluid) diaphragm choked with solid material.	Dismantle regulator and clean out solids - composite (fluid) diaphragm may also need to be replaced.
	107755-X-X: Excessive or unsteady or air pressure.	Provide stable regulated air supply.
107754-X-X: Fluid leaking from around adjuster screw and / or general loss of regulating function.	Composite diaphragm ruptured leaking fluid into spring space under bonnet.	Replace composite (fluid) diaphragm.
107755-X-X: Air or fluid leaking from both small witness holes in the underside of the diaphragm flange.	Air leakage from witness holes: pilot (air) diaphragm ruptured.	Replace pilot (air) diaphragm.
	Fluid leakage from witness holes: composite (fluid) diaphragm ruptured.	Replace both diaphragms.

Spare Parts List

250602 (Spare Parts Kit to suit 107754-X-X)				
ITEM	**PART NO.**	**DESCRIPTION**	**QTY**	**REMARKS**
6	192505	Seal - Ø12.4	2	
12	193232	Diaphragm (Composite)	1	

250603 (Spare Parts Kit to suit 107755-X-X)				
ITEM	**PART NO.**	**DESCRIPTION**	**QTY**	**REMARKS**
5	192505	Seal - Ø12.4	2	
7	192540	Diaphragm	1	Air
12	193232	Diaphragm (Composite)	1	Fluid

ACCESSORIES

PART No.	DESCRIPTION	REMARKS
ZZ-3026	Pressure Gauge - G¼ (¼" BSPP), 0-25 Bar, Ø63mm, bottom entry	
107929	Air Regulator Assembly - Manual control with gauge	*

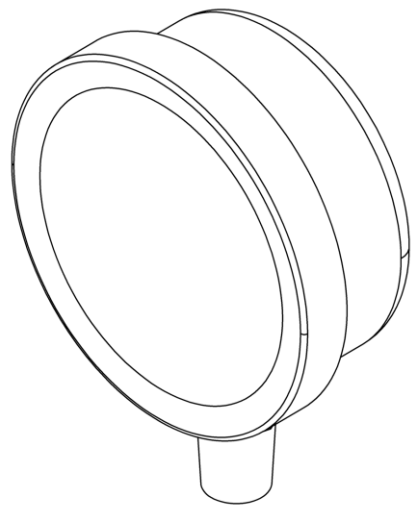

ZZ-3026

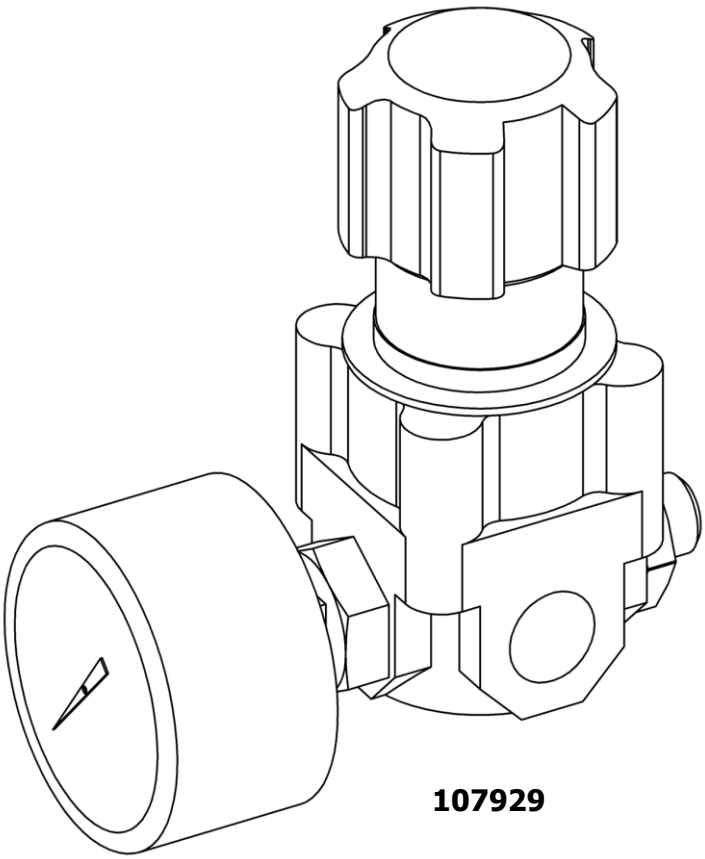

107929

* 107929:

G¼ Female Inlet,
G⅛ Male Outlet
Maximum Inlet pressure: 20 bar,
Outlet regulated range 0-8.5 bar.

Can be screwed in to control air supply to pilot regulator 107755-X-X after unscrewing 4mm push in elbow air fitting 174647.